Project Design Document

1. Design Intent

- *What experience are you trying to create?*
  *The goal of this project was to design **Infernotron**, a remote-controlled semi-robotic car that can be operated through a mobile application. The experience we wanted to create is one where the user feels like they are controlling an intelligent machine rather than just a simple toy vehicle. Using a smartphone app built with **MIT App Inventor**, the user can move the robot in different directions and trigger interactive features such as lights, sounds, and a shooting effect. At the same time, the robot can sense its surroundings and respond to objects in its environment, creating a more engaging and interactive robotic experience.*

- *Who is it for?*
  *Infernotron is designed primarily for **young adults and technology enthusiasts** who enjoy interactive gadgets and robotics. It combines two experiences in one device: a **remote-controlled vehicle** and a **responsive robot system**. Users can drive the robot like a car while also observing how it reacts to objects and commands through sensors and visual indicators. In the future, a similar concept could be useful for **security personnel or inspection teams**, allowing them to remotely explore areas that may be unsafe or difficult for humans to access.*

- *If solving a problem, what problem does it solve?*
- **Remote inspection in unsafe areas**
  Infernotron can be controlled remotely through Bluetooth, allowing it to move into locations that may be unsafe or inconvenient for humans to enter directly. Instead of physically approaching a risky area, a user could send the robot to explore and observe the surroundings.
- **Intruder detection / security prototype**
  The robot includes an **IR (Infrared) sensor** that detects nearby objects. When an object is detected, the robot activates status indicator LEDs to alert the user. This creates a simple prototype of a mobile security device that can identify the presence of objects or possible intruders.
- **Search and rescue exploration (concept level)**
  In a conceptual sense, the robot demonstrates how small robotic vehicles can be used to explore environments during search and rescue situations. The **IR sensor** helps detect obstacles or nearby objects, while the robot's mobility allows it to navigate tight spaces.

The **laser modules and LED indicators** serve as visual targeting or signaling tools, while the buzzer and lighting effects simulate interaction with detected objects. Together, these components demonstrate how a compact robotic platform could assist in locating objects or navigating unfamiliar environments.

2. Inspiration & References

- *Existing products / ideas*

- *Images / links*

https://bearhugs.in/products/transformers-lamborghini-lockdown-robot-car
https://en.wikipedia.org/wiki/Transformers_(film)

- *What did you learn from them?*

3. User Journey

Step-by-step experience of the user

1. **Opening and connecting to the robot**
   The user begins by opening the mobile application created using **MIT App Inventor**. The app scans for nearby Bluetooth devices and displays the available options. The user selects and connects to the robot named **Infernotron**. Once the connection is established, the robot activates its lasers and prepares to receive commands from the user.

2. **Controlling the robot's movement**
   After connecting, the user can control the robot's movement through the directional buttons in the app. The robot can move **forward, reverse, left, and right**, allowing the user to navigate it through different environments. This creates the experience of remotely driving a robotic vehicle and exploring the surroundings from a distance.

3. **Object detection and targeting**
   As the robot moves, its **IR sensor continuously scans the environment** for nearby objects. When the sensor detects something in front of it, the robot activates its **laser indicators**, visually pointing toward the detected target. At the same time, the app notifies the user with a message such as **"TARGET LOCKED... SHOOT?"**, indicating that an object has been detected and the robot is ready for the next command.

4. **Engaging the target**
   If the user chooses to press the **SHOOT** button in the app, the robot activates its shooting effect. The LEDs placed at the front of the robot blink rapidly while the buzzer produces rhythmic sounds, simulating a firing mechanism. This interaction gives the user a sense of engagement and control, making the robot feel responsive and interactive rather than simply remote-controlled.

5. **Continuous interaction**
   The user can continue navigating the robot, detecting objects, and activating different responses through the app. This creates an interactive cycle of **exploration, detection, and engagement**, allowing the user to experience both control and environmental interaction through the robot.

4. Success Criteria

Define measurable success

• **Successful connectivity and control:** Infernotron should reliably connect to the mobile application and respond correctly to movement commands such as forward, reverse, left, and right. The **SHOOT** command should activate the LED shooting effect and buzzer immediately when triggered by the user.

• **User satisfaction and engagement:** The user should feel satisfied with the interaction experience, including smooth control of the robot, clear visual feedback from the lasers and LEDs, and responsive reactions from the robot when objects are detected or commands are given.

• **Reliability and consistent performance:** The robot should maintain a stable Bluetooth connection during operation and consistently perform its functions without unexpected interruptions. The motors, sensors, and visual indicators should work together reliably so that the robot can detect objects, move accurately, and execute commands as intended.

5. System Overview

High-level explanation of the system
Infernotron is a Bluetooth-controlled robotic vehicle that can be operated through a mobile application. The system allows a user to remotely drive the robot, detect objects in its surroundings, and trigger interactive responses such as lights, lasers, and sound effects. Commands from the mobile app are sent wirelessly to the robot, where the microcontroller processes them and controls the motors, sensors, and output devices. This creates a system where software, electronics, and mechanical components work together to produce movement and interaction with the environment.

Main parts of the system

• **ESP32 Microcontroller** – The main control unit of the robot. It processes Bluetooth commands from the app and controls all connected components.

• **Mobile Application** – Built using **MIT App Inventor**, the app allows the user to connect to the robot, send movement commands, and activate features like the shooting effect.

• **Motor Driver and DC Motors** – The motor driver controls the power supplied to the two DC motors, allowing the robot to move forward, reverse, and turn left or right.

• **IR Sensor** – Detects objects in front of the robot. When an object is detected, the system activates indicator LEDs to alert the user.

• **Laser Modules** – Used as visual targeting indicators that point toward detected objects.

• **LED Indicators and Buzzer** – Provide visual and audio feedback, especially during the shooting sequence or when the robot detects objects.

Together, these components form a complete robotic system that integrates **control, sensing, movement, and user interaction**.

6. High-Level Block Diagram

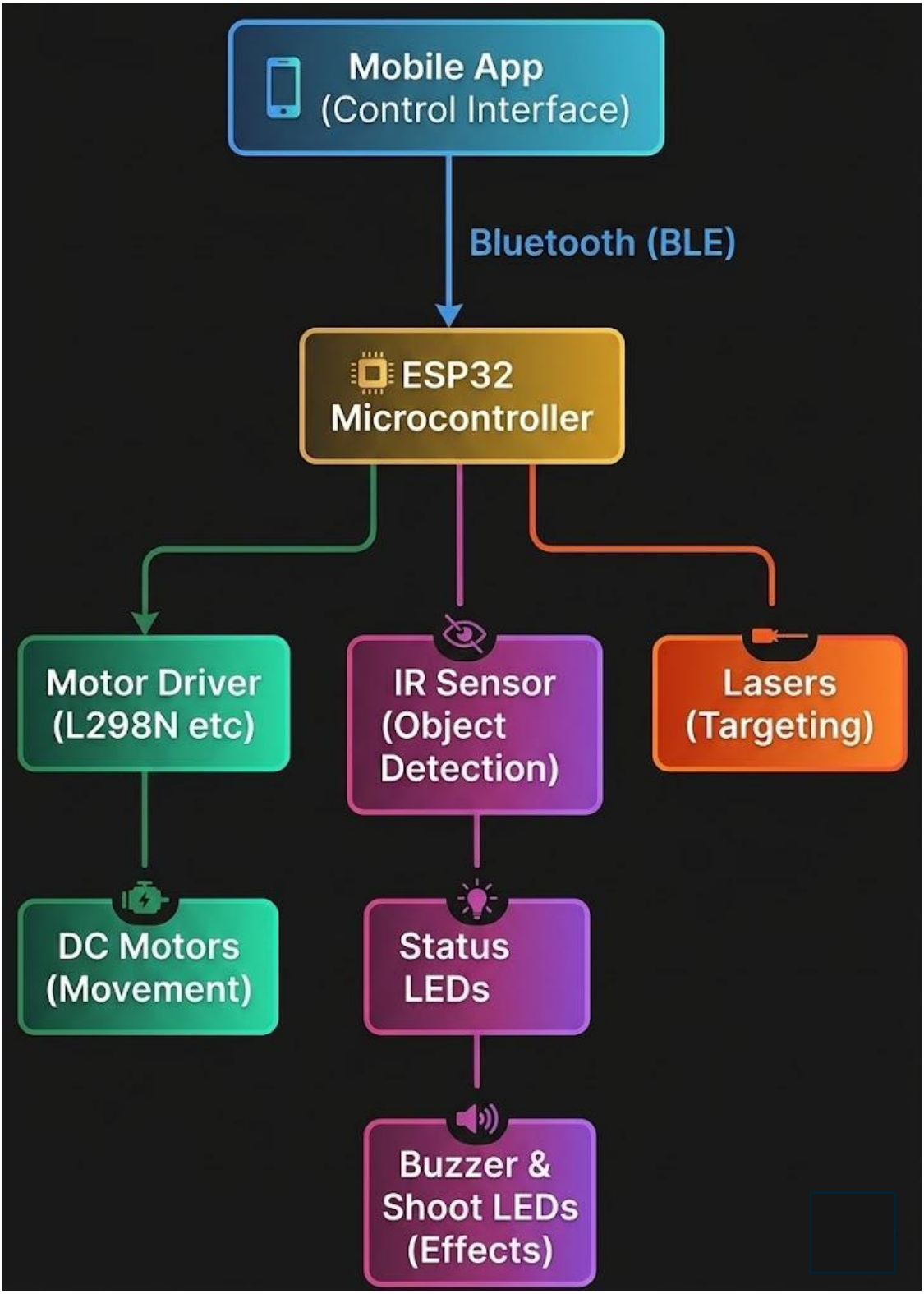

7. Input / Output Mapping

Input	Process	Output
User presses Forward / Back / Left / Right on the mobile app	Command is sent via Bluetooth (BLE) to the ESP32 microcontroller. The ESP32 interprets the command and sends control signals to the motor driver (L298N) which regulates voltage and direction for each motor.	DC Motors rotate accordingly, causing the robot to move forward, backward, left, or right.
IR Sensor detects an object in front of the robot	The IR sensor sends a signal to the ESP32 indicating object presence. The ESP32 processes this signal and activates the targeting system.	Laser modules turn ON and point toward the detected object, indicating a locked target.
Object detected and targeting active	The ESP32 sends a notification signal through Bluetooth to the mobile app interface.	The mobile app displays “TARGET LOCKED”, informing the user that an object is detected.
User presses SHOOT button in the app	The shoot command is transmitted via Bluetooth to the ESP32. The ESP32 triggers the shooting simulation system including LEDs and buzzers.	Front LEDs blink rapidly (simulating gunfire) and the buzzer produces rhythmic sound effects, creating a shooting effect.

System powered ON	**Battery supplies power to the ESP32, motor driver, sensors, lasers, and indicators. The ESP32 initializes connections and prepares the modules.**	**System becomes active, Bluetooth connection is ready, sensors start scanning, and the robot waits for commands.**

8. Sketches & Concepts

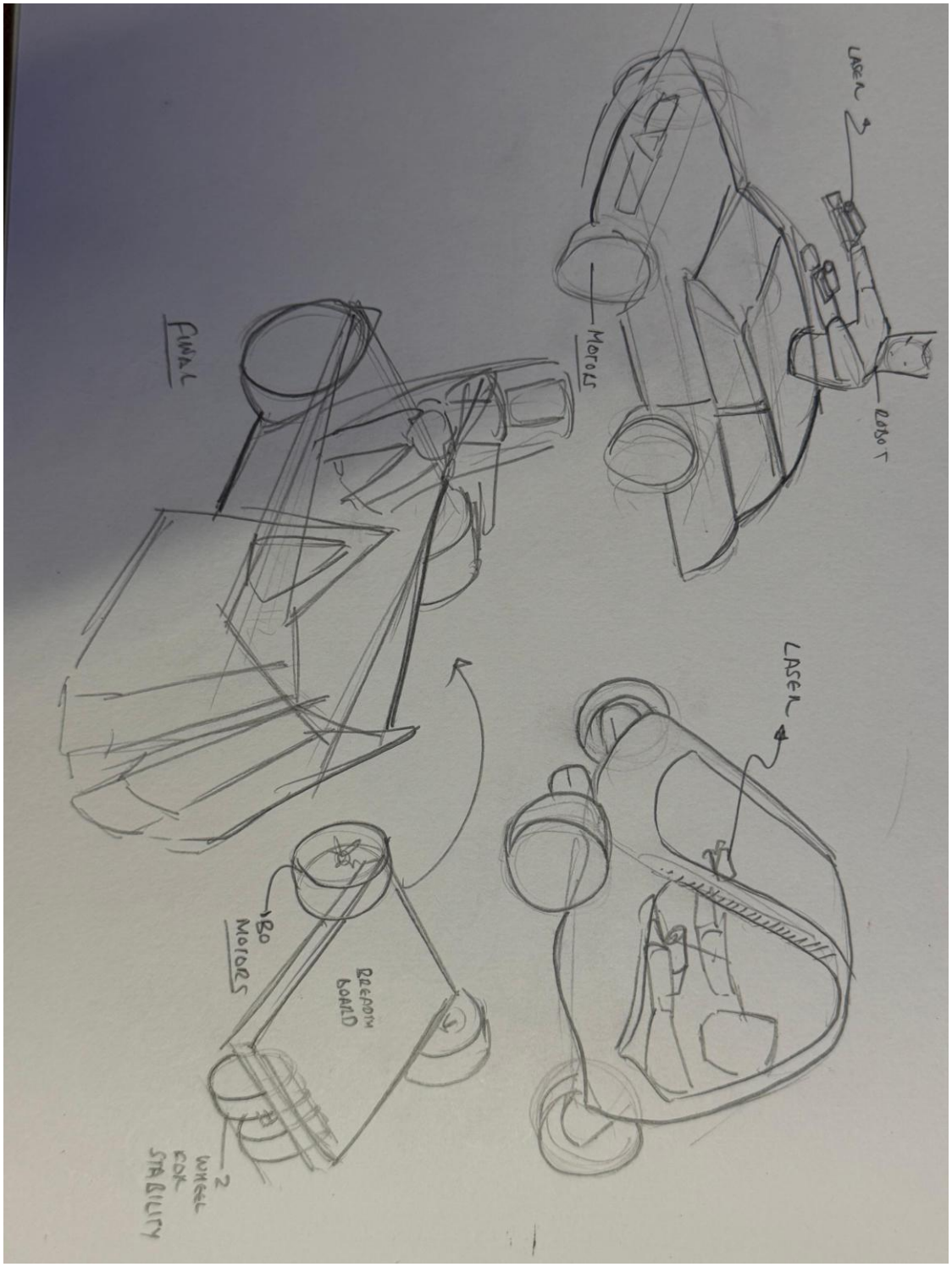
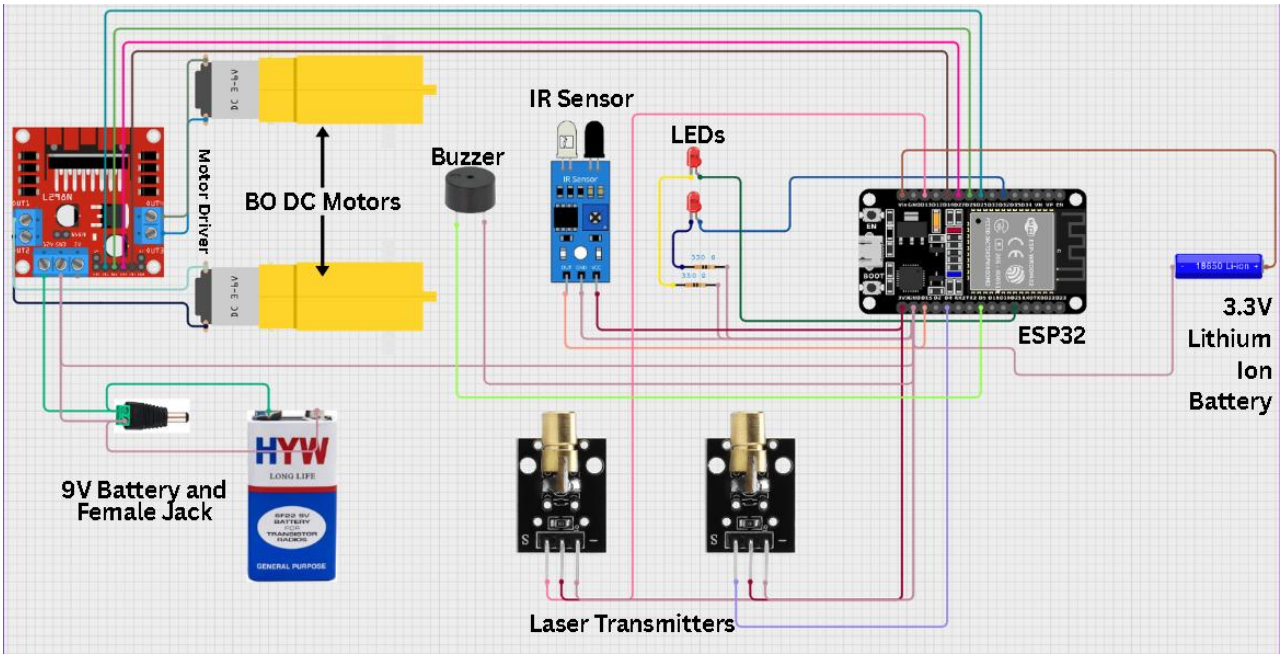
9. Final System Architecture (Labelled)